Tamworth Regional Aquatic Centre
Schematic Design
CREO CONSULTANTS
230459
31/05/2024

Notes
The information contained in this document is copyright and may not be used or reproduced for any other project or purpose.

Verify all dimensions and levels on site and report any discrepancies to CO-OP for direction prior to the commencement of work. Drawings are to be read in conjunction with all other contract documents.

Use figured dimensions only. Do not scale from drawings. CO-OP cannot guarantee the accuracy of content and format for copies of drawings issued electronically. The completion of the Issue Details Checked and Authorised section below is confirmation of the status of the drawing. The drawing shall not be used for construction unless endorsed 'For Construction' and authorised for issue.

© CO-OP STUDIO PTY LTD
Registered Business Name ABN 93 167 793 600

Note to Architect:
We'll need to review how this precast panel is supported.

300mm THICK SLAB
N32 CONCRETE
100mm MAX SCREED
N20-150 EACH WAY, TOP AND BOTTOM
5.0kPa MAXIMUM PLANT LOADING

Note to Architect:
Window mullions on the west elevation will need to extend to the underside of the truss for lateral restraint against wind loading.

BR1 TYPICAL

PB2 FULL FIXETY CONNECTION TO RB3, BOTH SIDES

PB2 FULL FIXETY CONNECTION TO RB3, BOTH SIDES

PB2 FULL FIXETY CONNECTION TO RB3, BOTH SIDES

CONNECTION OF RB10 TO WINDOW MULLIONS TO BE COORDINATED WITH MULLION SUPPLIER, TYPICAL

Note to Architect:
A new column has been inserted here following the structural workshop.

Note to Architect:
Concrete wall not needed here.

Note to Architect:
A column has been inserted here to support the cantilevered facade.

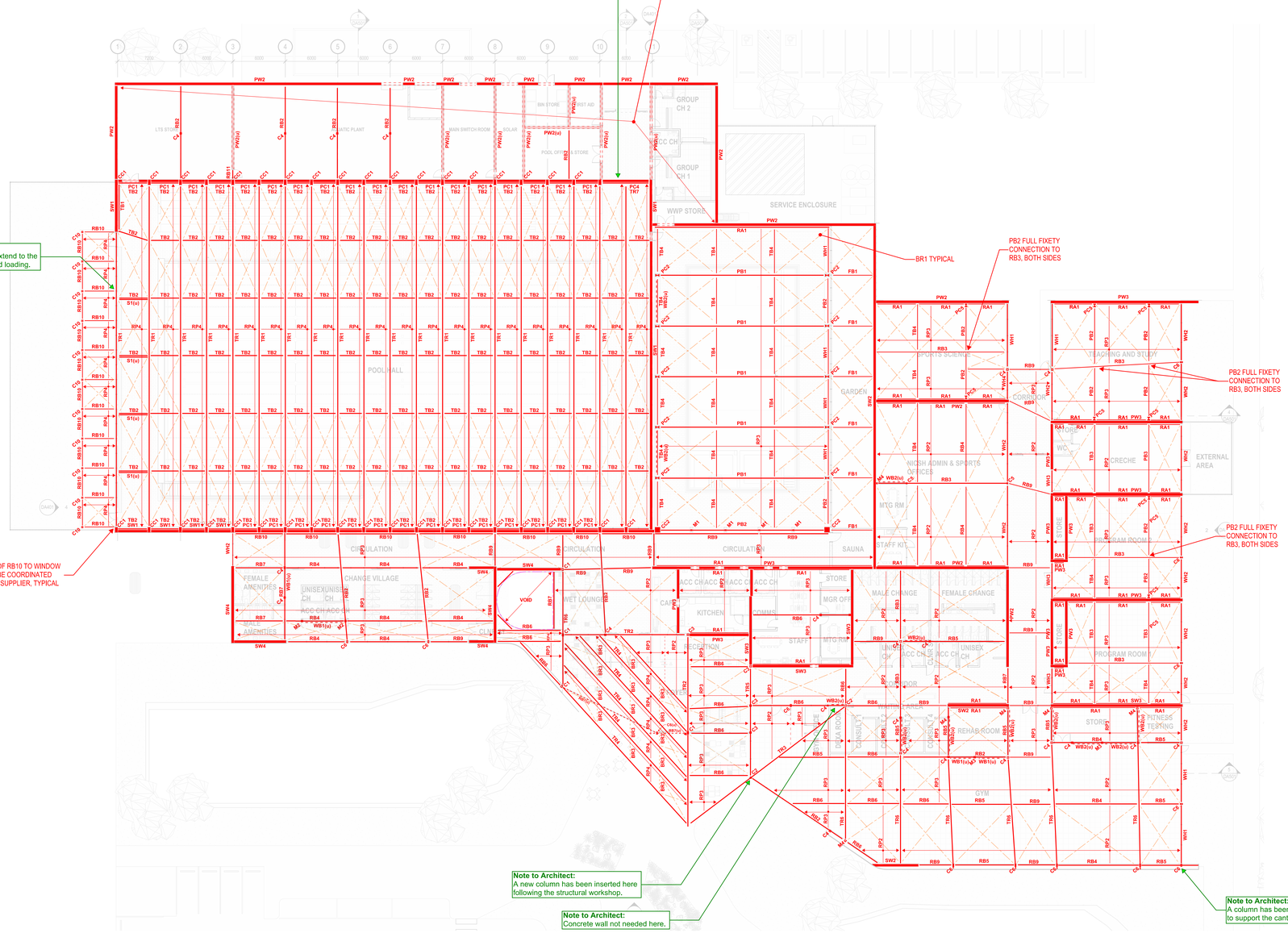

1 GROUND FLOOR PLAN
1 : 200

ROOF GENERAL ARRANGEMENT PLAN

TRUSSES
TR1: 1800mm Deep Truss
2200mm Deep Haunches
200 x 200 x 9.0 SHS T & B Chords
150 x 150 x 6.0 SHS Vert. & Diag's
Restrained At Quarter Points
TR2: 900mm Deep Truss
150 x 150 x 9.0 SHS T & B Chords
150 x 150 x 6.0 SHS Vert. & Diag's
Restrained At Mid Point
Verticals Location @ Truss Connection Points
TR3: Triangular Cantilevered Truss
2800mm Maximum Depth
900mm Minimum Depth
250 x 250 x 9.0 SHS T & B Chords
250 x 250 x 6.0 SHS Vert. & Diag's
Restrained At Quarter Points
TR4: 900mm Deep Truss @ 1.8m Max Cts
150 x 150 x 9.0 SHS T & B Chords
150 x 150 x 6.0 SHS Vert. & Diag's
Restrained At Quarter Points
TR5: 2800mm Deep Cantilevered Truss
250 x 250 x 9.0 SHS T & B Chords
250 x 250 x 6.0 SHS Vert. & Diag's
Restrained At Mid Point
Verticals Location @ Truss Connection Points
TR6: 900mm Deep Truss @ 1.8m Max Cts
150 x 150 x 9.0 SHS T & B Chords
150 x 150 x 6.0 SHS Vert. & Diag's
Restrained At Quarter Points
TR7: 1800mm Deep Truss
2200mm Deep Haunches
200 x 200 x 9.0 SHS T & B Chords
150 x 150 x 6.0 SHS Vert. & Diag's
Restrained At Quarter Points

ROOF GENERAL ARRANGEMENT PLAN

RB1: 700 WB 130, 20mm Precamber
Fly Bracing @ Third Points
RB2: 610 UB 125, 20mm Precamber
Fly Bracing @ Third Points
RB3: 460 UB 82, 30mm Precamber
Fly Bracing @ Third Points
RB4: 410 UB 60
RB5: 360 UB 56.7
RB6: 310 UB 46.2
RB7: 250 UB 37.3
RB8: 250 PFC
RB9: 200 UB 29.8
RB10: 200 PFC
RB11: 150 PFC

PB1: 530 UB 92.4 - Portal Frame Beam
Fly Bracing @ Third Points
20mm Precamber
PB2: 460 UB 82.1 - Portal Frame Beam
Fly Bracing @ Third Points
20mm Precamber

TB1: 200 x 100 x 5.0 RHS @ 90 Degrees
TB2: 150 x 150 x 5.0 SHS
TB3: 250 PFC
TB4: 200 PFC
TB5: 200 UB 29.8 with 200 PFC Over
TB6: 250 UB 37.3 with 230 PFC Over

FB1: 200 UB 29.8 - Feature Beam
Cladded to the architect's requirements

C1: 250 x 150 x 10.0 RHS
C2: 219.1 x 8.2 CHS
C3: 200 x 200 x 9.0 SHS
C4: 150 x 150 x 9.0 SHS
C5: 125 x 125 x 6.0 SHS
C6: 150 x 100 x 9.0 RHS
C7: 89 x 89 x 6.0 SHS
C8: 75 x 75 x 6.0 SHS
C9: 139.7 x 5.4 CHS (Galv.)
C10: 150 x 150 x 6 SHS (Galv)
Fully Fixed Base Plate
SC1: 89 x 89 x 6.0 SHS - Stub Column
Fully Fixed Base Connection

CC1: 600 x 300 Insitu RC Column
CC2: 600 x 600 Insitu RC Column

PC1: 310 UC 158
PC2: 460 UB 82 - Portal Column
PC3: 410 UB 59.7 - Portal Column
PC4: 410 UB 59.7 - Crucifix Column,
Refer to Detail
PC5: 250 UC 37.3 - Portal Column

M1: 150 x 150 x 6 SHS - Mullion
M2: 152 x 76 x 6.0 RHS - Mullion
M3: 150 x 100 x 6.0 RHS - Mullion
M4: 125 x 125 x 6.0 SHS - Mullion
M5: 89 x 89 x 6.0 SHS - Mullion

BR1: 20mm Dia Rod Brace
BR2: 16mm Dia Rod Brace
BR3: 125 x 125 x 12 EA Cross Brace
WB1: 20mm Dia Rod Brace
WB2: 100 x 100 x 6.0 SHS 'K' Brace,
WB3: 16mm Dia Rod Brace
S1: 125 x 125 x 5.0 SHS - Strut

RA1: 100 x 100 x 10 EA (Galv.)

RP1: C35024 Purlins @ 600cts,
2 Brace Per Span,
Single Spans
RP2: C25024 Purlins @ 900cts,
2 Brace Per Span,
Single Spans
RP3: C20019 Purlins @ 900cts,
1 Brace Per Span,
Single Spans
RP4: C15019 Purlins @ 900cts,
0 Brace Per Span,
Single Spans

WH1: 200x200x6.0 SHS - Window Header
WH2: 150x150x6.0 SHS - Window Header
WH3: 125x125x5.0 SHS - Window Header
WH4: 89x89x6.0 SHS - Window Header
WH5: 65x65x6.0 SHS - Window Header
WS1: 200x200x6.0 SHS - Window Sill
WS2: 150x150x6.0 SHS - Window Sill
WS3: 125x125x5.0 SHS - Window Sill
WS4: 89x89x6.0 SHS - Window Sill
WS5: 65x65x6.0 SHS - Window Sill

SHEAR WALLS
SW1: 300 thick, extent as shown [SW1]
SW2: 280 thick, extent as shown [SW1]
SW3: 250 thick, extent as shown [SW2]
SW4: 200 thick, extent as shown [SW3]

PRECAST / LOADBEARING WALL
PW1: 300 thick, extent as shown
PW2: 280 thick, extent as shown [PW1]
PW3: 250 thick, extent as shown [PW2]
PW4: 200 thick, extent as shown [PW3]
PW5: 150 thick, extent as shown [PW4]

LOADING
SDL: 1.0 kPa
LL: 0.25 kPa (Non-Trafficable Roof)

Subject to Geotechnical confirmation and detailed lateral analysis.

NOTES
1. REFER TO STRUCTURAL ENGINEERS DOCUMENTATION FOR FULL DETAILS ON CONCRETE PROFILES AND STRUCTURAL SIZING.
2. REFER TO SERVICE ENGINEERS DOCUMENTATION FOR CONFIRMATION OF ALL SERVICE PENETRATION SIZES, REQUIREMENTS AND SETOUTS.
3. PENETRATION SIZES LESS THAN 100mm DIAMETER NOT SHOWN FOR CLARITY.

WALL SCHEDULE
CXX CONCRETE REINFORCED PRECAST CONCRETE
MXX CONCRETE BLOCKWORK
PXX PARTITION WALL (REFER A001 FOR DETAILS)

LEGEND
WXX.X.XX WINDOW CODE (WINDOW NUMBER & ROOM NUMBER)
XX X.XX DOOR CODE (DOOR NUMBER OVER ROOM NUMBER)
EXTENT OF EXISTING BUILDING, NOT PART OF THIS SCOPE.
STEP IN SLAB. REFER TO DRAWINGS FOR ASSOCIATED LEVELS.

BOL BOLLARD
COL COLUMN
FH FIRE HYDRANT (REFER ENG. DOCUMENTATION)
FHR FIRE HOSE REEL (REFER ENG. DOCUMENTATION)
F.EXT FIRE EXTINGUISHER (REFER ENG. DOCUMENTATION)
FSB FLOOR SERVICES BOX
RWH RAIN WATER HEAD
RSL ROOF SKYLIGHT

TRUSS CONFIGURATIONS
(Not to scale)

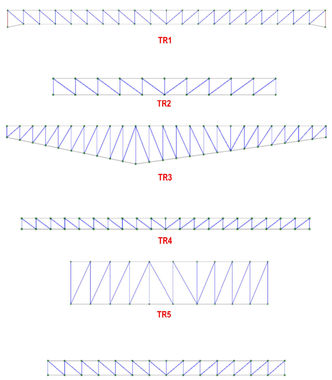

NOTES:
1. ALL EXPOSED STEELWORK TO BE HOT DIPPED GALVANISED.
2. FIRE RATING TO ARCHITECTS DETAILS.
3. WATERPROOFING BY OTHERS.
4. FACADE AND SECONDARY STEEL BY OTHERS.
5. INTERNAL PARTITION FRAMING BY OTHERS.
6. EXTERNAL WINDOW MULLIONS BY OTHERS.
7. PLANT PLATFORM SCREENS AND FENCES BY OTHERS.

ROOF GENERAL ARRANGEMENT PLAN

REV DESCRIPTION DATE APP
CLIENT

CO.OP
CO-OP STUDIO
Level 6, 84 Wellington Street, Collingwood, 3066
Office +61 452 281 818
admin@co-opstudio.com.au

PROJECT
Tamworth RAC

PROJECT NUMBER
100358

DRAWING
GROUND FLOOR PLAN

SCALE As indicated @ A0

DRAWN BY Author

PRELIMINARY
NOT TO BE USED DURING CONSTRUCTION

DRAWING NO. REVISION
DA201

WORK IN PROGRESS
SK02
Rev 2.0